WRBE 2000 KF-M4-M2.5-1.0
Plastic fiber optic

- Flexible thanks to fine inner fibres
- Extremely small bending radius
- Auxiliary optic usable

Safety instructions

The Instruments are not to be used for safety applications, in particular applications in which safety of persons depends on proper operation of the instruments.
These instruments shall exclusively be used by qualified personnel.

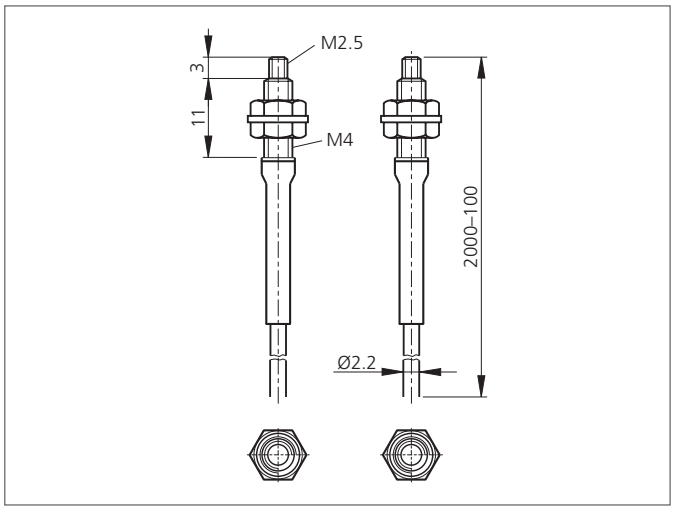

TECHNICAL INFORMATION (typ.)	
Operating principle	Through beam sensor
Size	M4 (thread)
Design	screw
Length	2.000 mm
Opening angle	56°
Light outlet	axial, Focus optics applicable
Single fibre-optics	Ø 2,2 mm
single fibre	Ø 1,0 mm, (151 x 0,075 mm)
Bending radius	> 5 mm
Temperature resistance	-20 ... + 60 °C
Protection class	IP 67
For	Amplifier for plastic fiber optics
Material	stainless steel (Thread sleeve) polymethyl methacrylate (Fibre) PE (Cladding)